WAVE ENERGY CONVERTER MODELING IN THE TIME DOMAIN: A DESIGN GUIDE

BRET BOSMA

SUSTECH

8/1/2013

OCEAN WAVE ENERGY

- Ocean energy is a significant source in several forms
  - Tidal
  - Current
  - Temperature gradient (OTEC and SWAC)
  - Salinity
  - Wave

- Compared to other renewables, wave energy has advantages:
  - Higher availability
  - More predictable and forecastable: up to 10 hours forecast time
  - Low viewshed impact
- At present, wave energy is estimated at 20-30 cents per kWh. Coal and wind are 5 to 10 cents per kWh.
- Wave power is about 20-30 years behind wind, but it is predicted that wave power can catch up quickly.

WAVE ENERGY POTENTIAL

- 2010 OMAE (Assesing the Global Wave Energy Potential)
  - 32400 TWh/year potential
- 2011 EPRI study
  - United States
    - 1170 TWh/year potential
  - Oregon
    - Inner shelf 143 TWh/year potential
- US Electricity use 2010
  - 4143 TWh/year

WAVE POWER DENSITY (kW/m)

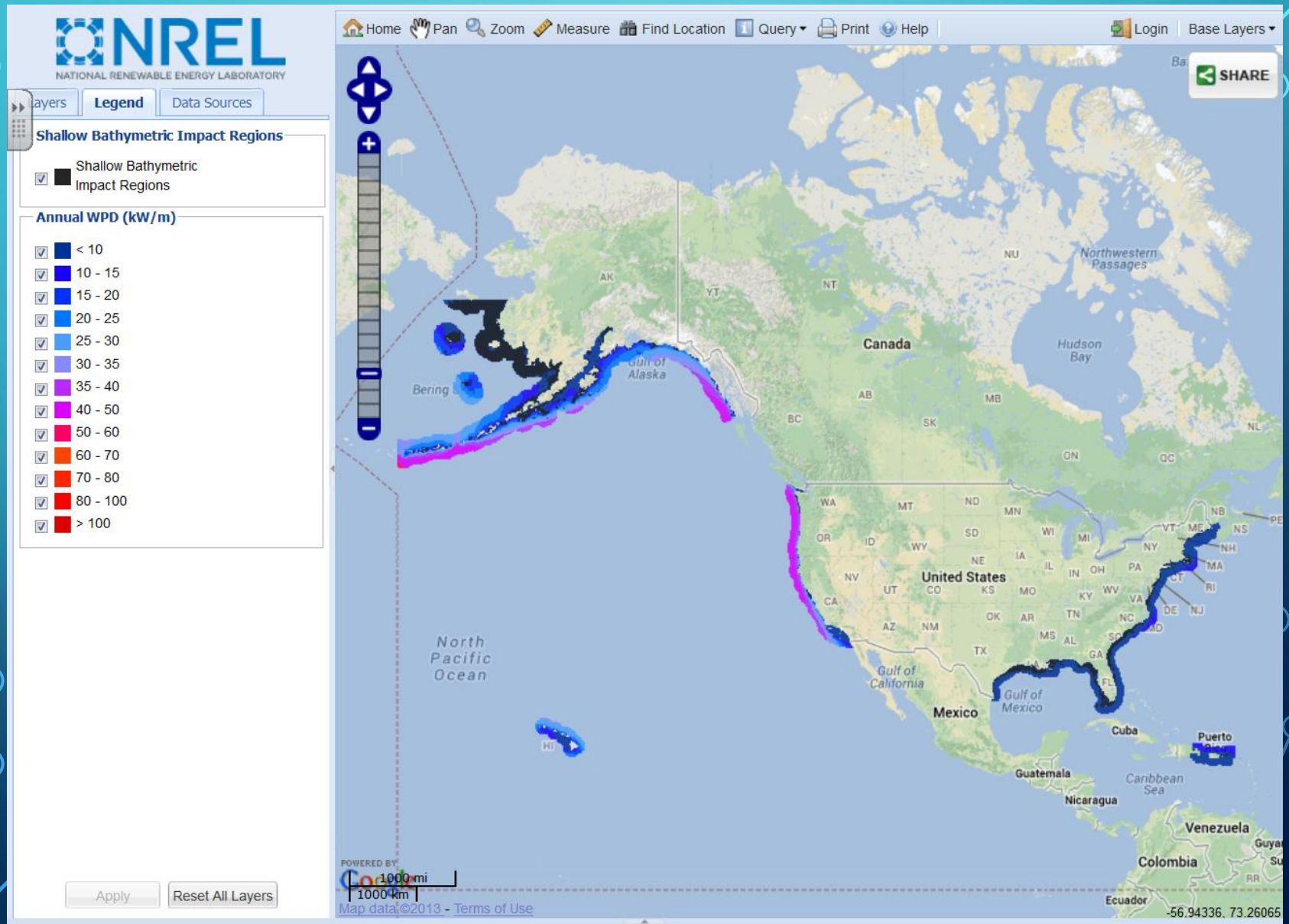

NORTHWEST NATIONAL MARINE RENEWABLE ENERGY CENTER (NNMREC)

- Investigate technical, environmental, and social dimensions of Marine and Hydrokinetics
- Advance Ocean Wave Energy Industry by assisting developers
  - Device design
  - Development
  - Testing
  - Evaluation
  - Integration
- Lower Levelized Cost of Energy
- Time domain modeling

NNMREC
Oregon State University
University of Washington

WAVE ENERGY CONVERTER (WEC) TIME DOMAIN MODELING

Time Domain Formulation and Analysis (Nonlinear) – Relatively moderate simulation time/More detailed analysis possible

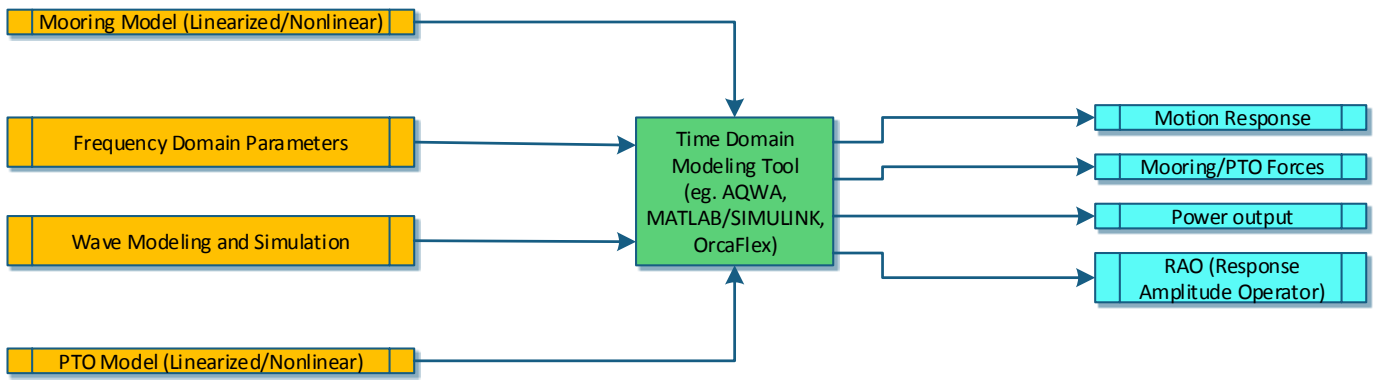

- MATLAB/Simulink
  - Heave only

GENERIC WEC MODEL

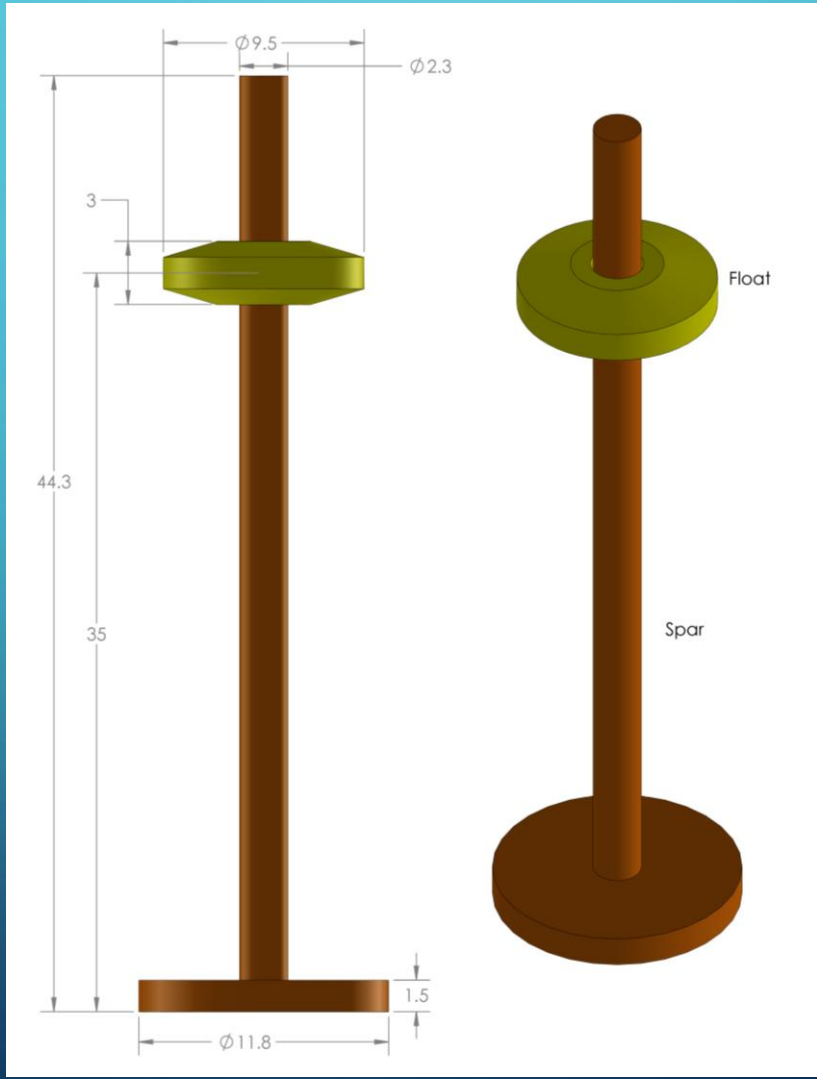

FLUID FORCES ON STRUCTURE

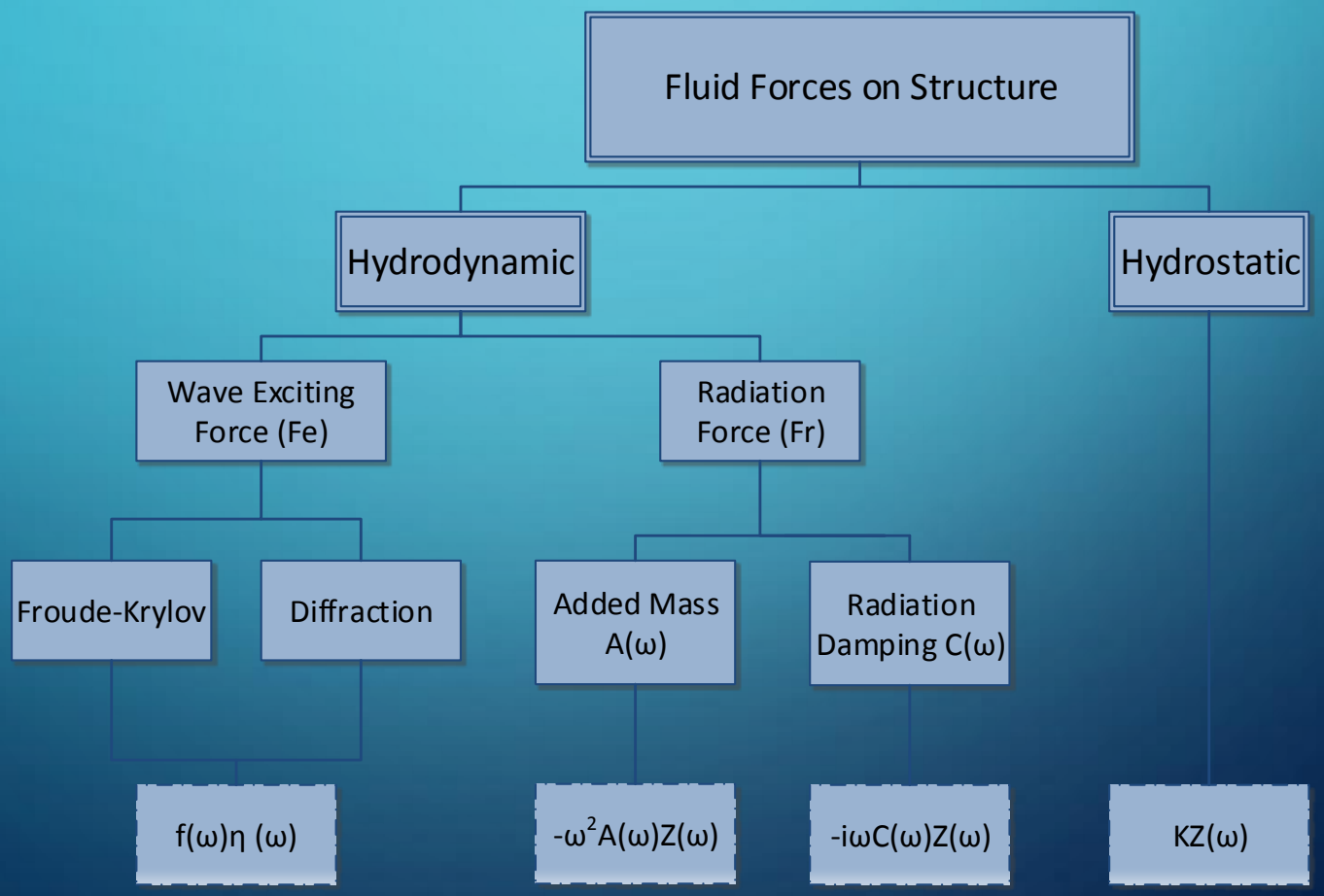

HYDRODYNAMICS

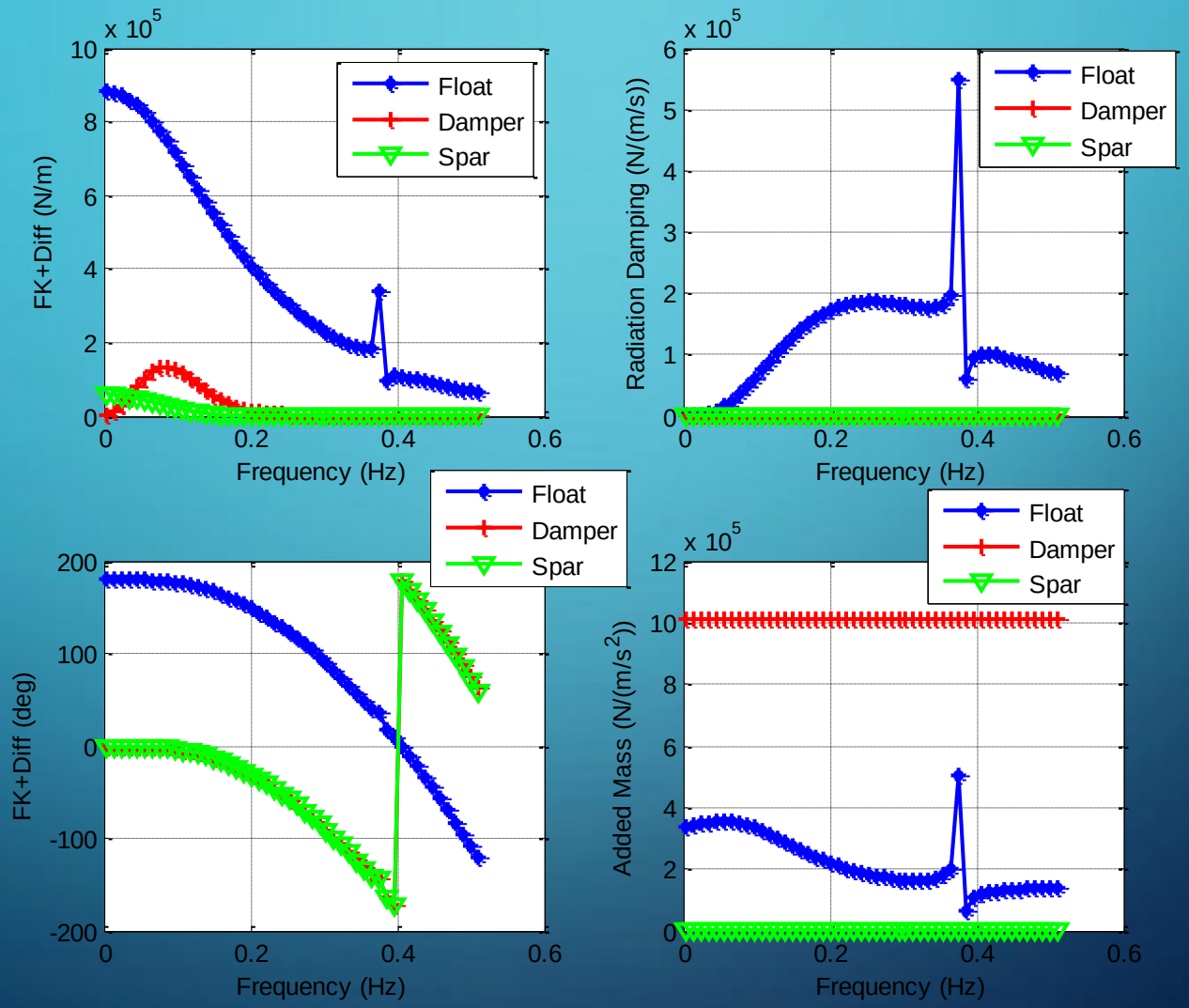

EQUATIONS OF MOTION

$$F_{e1}(t) - F'_{r11}(t) - F'_{r21}(t) - F_{hs1}(t) - F_{pto}(t) - F_{v1}(t) = \left(M_1 + m_1(\infty)\right)\ddot{z}(t)$$

$$F_{e2}(t) - F_{r22}'(t) - F_{r12}'(t) - F_{hs2}(t) + F_{pto}(t) - F_{v2}(t) - F_m(t) = \left(M_2 + m_2(\infty)\right)\ddot{z}(t)$$

$$F_e(t) = \int_{-\infty}^{\infty} \eta(\tau) F_t(t-\tau) d\tau$$

$$F_r(t) = -\int_{-\infty}^{t} k(t-\tau)\dot{z}(\tau) d\tau - m(\infty)\ddot{z}(t)$$

$$k(t) = \frac{1}{2\pi}\int_{-\infty}^{\infty} K(\omega) e^{j\omega t} d\omega$$

$$F_t(t) = \frac{1}{2\pi}\int_{-\infty}^{\infty} F(\omega) e^{j\omega t} d\omega$$

$$K(\omega) = R(\omega) + i\omega[m(\omega) - m(\infty)]$$

$$F_{hs}(t) = \rho g A z(t)$$

$$F_{pto}(t) = B\dot{z}(t)$$

$$F_m(t) = -K_m z(t)$$

$$F_v(t) = B_{loss}\dot{z}(t)$$

SIMULINK MODEL

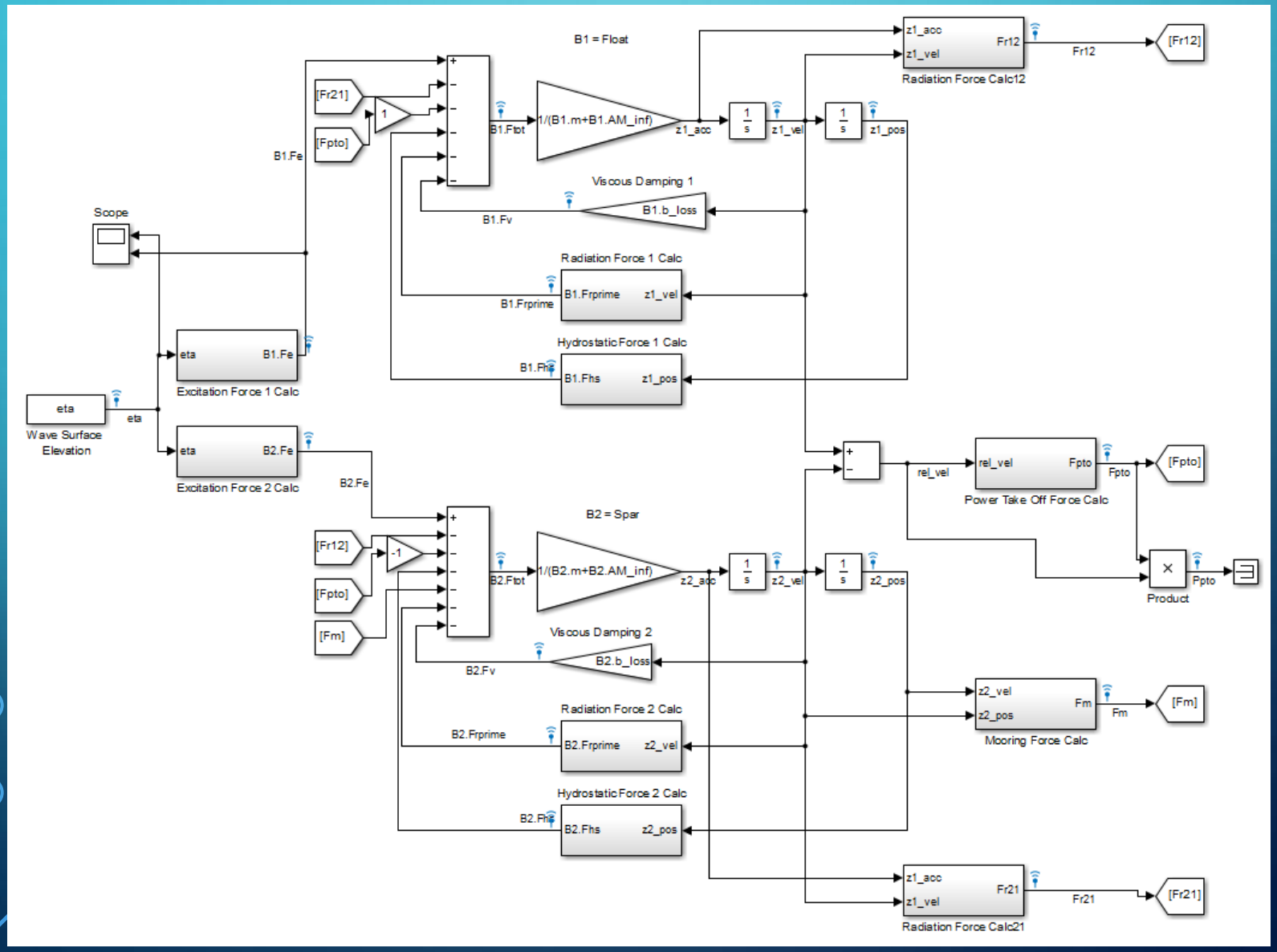

EXCITATION IMPULSE RESPONSE FUNCTION

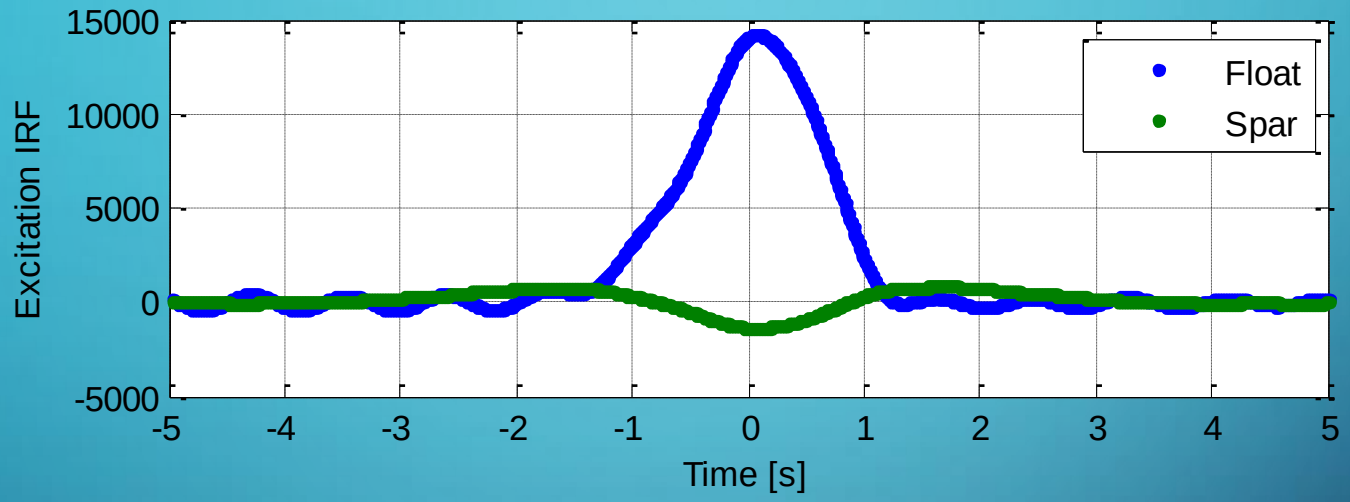

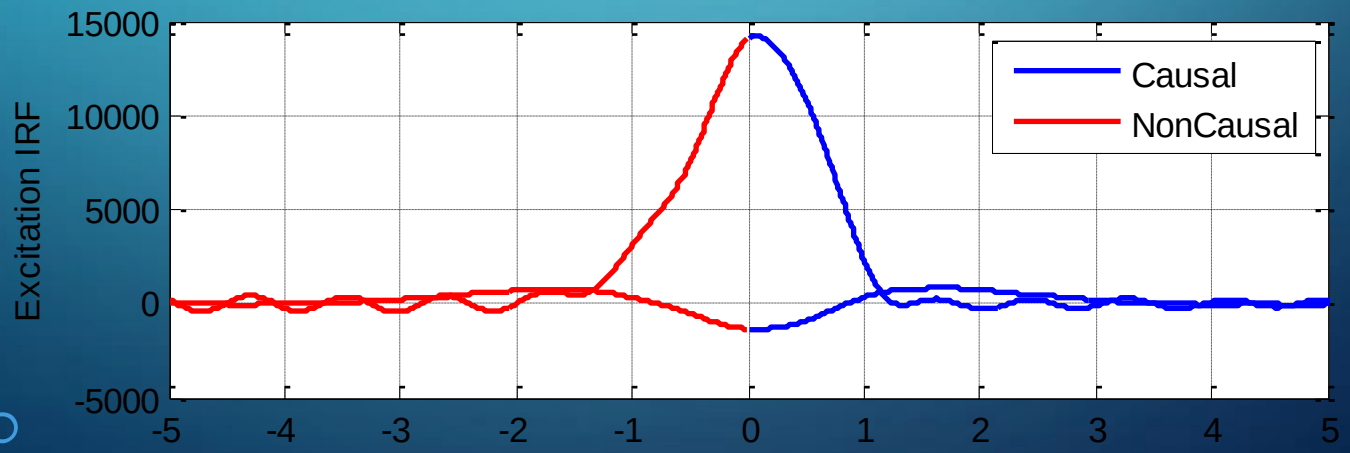

EXCITATION FORCE

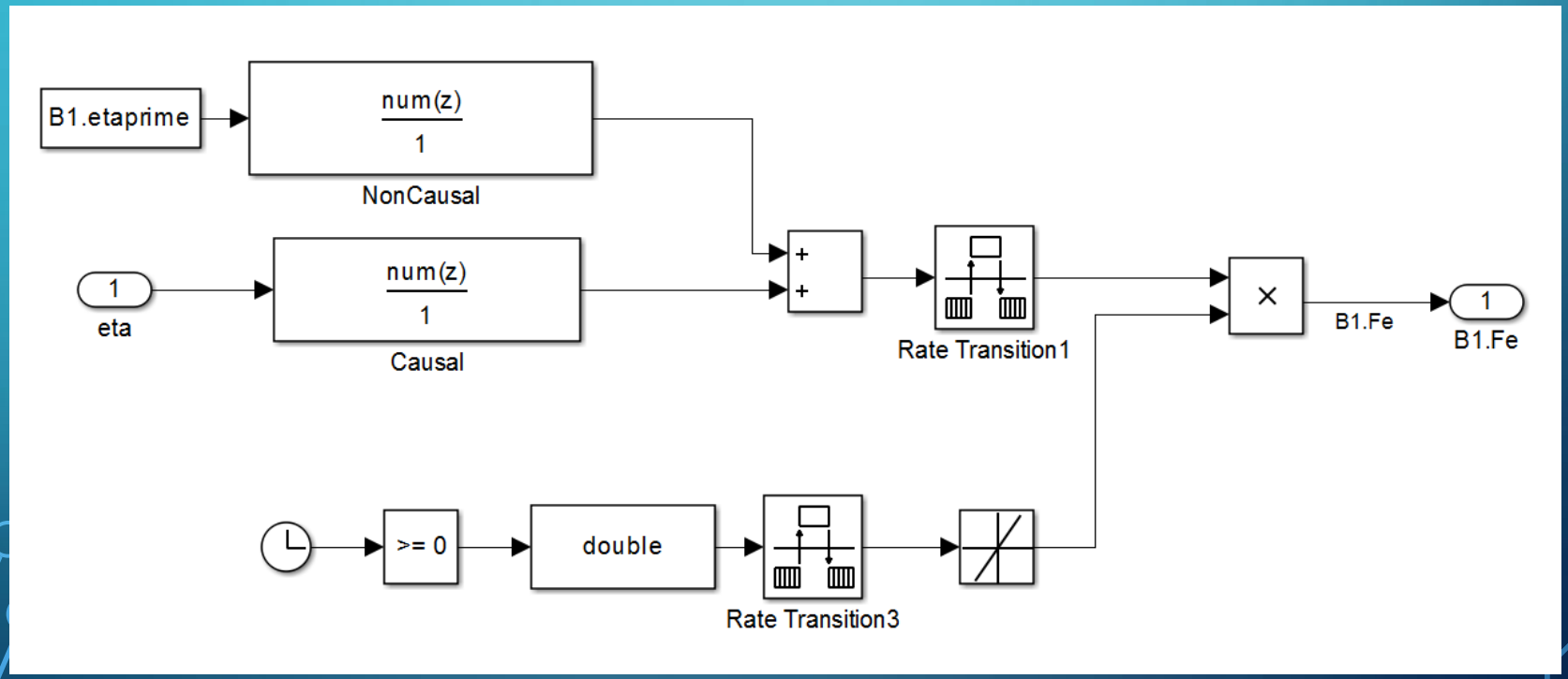

REGULAR WAVE OUTPUT

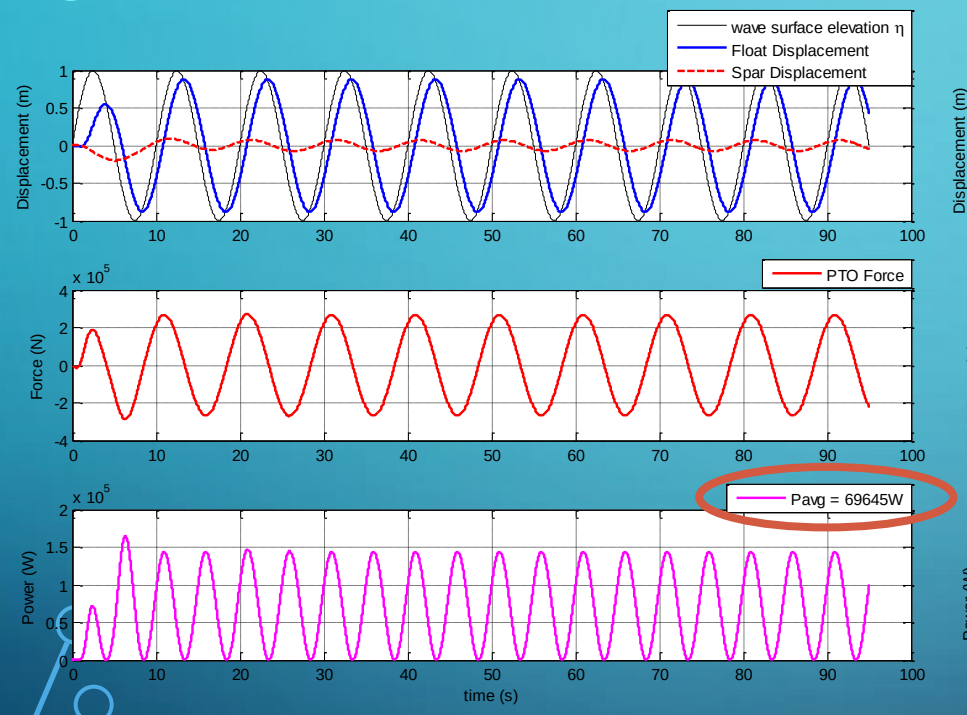

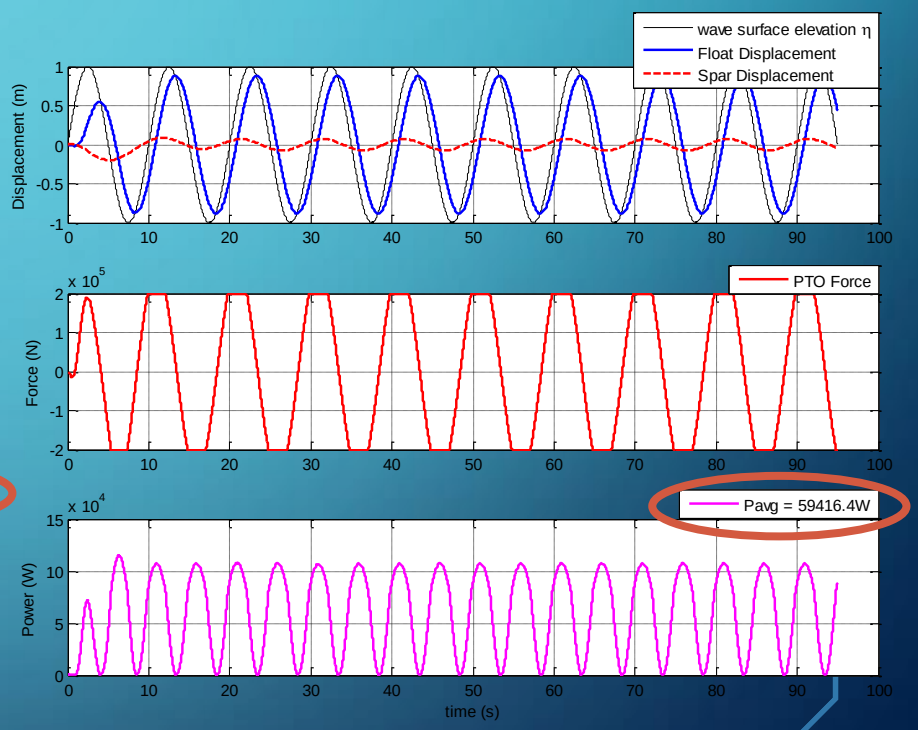

Introduction of system nonlinearities can identify significant power loss not modeled in the frequency domain simulations.

IRREGULAR WAVE OUTPUT

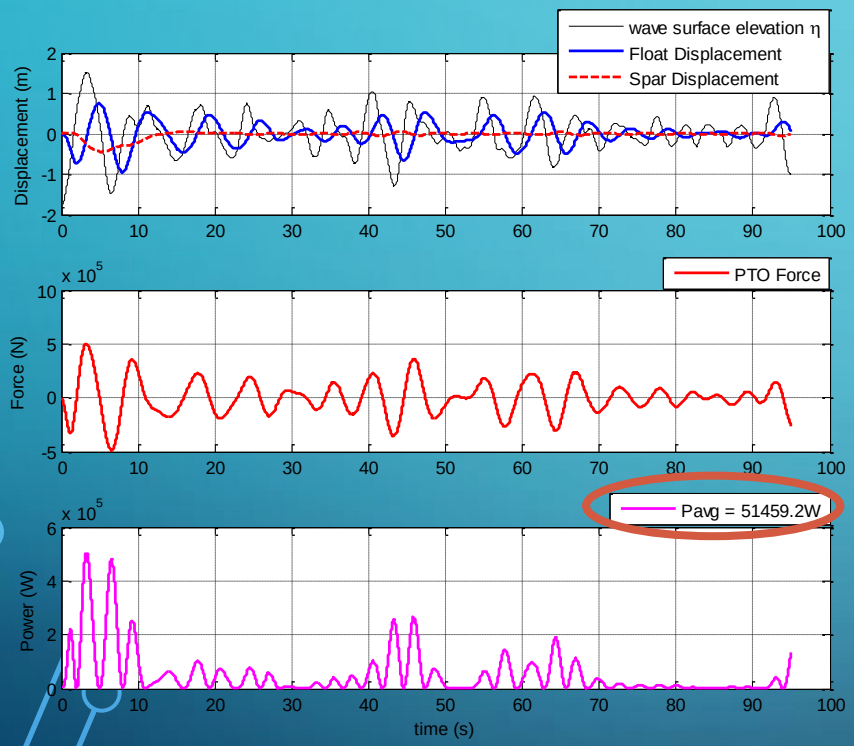

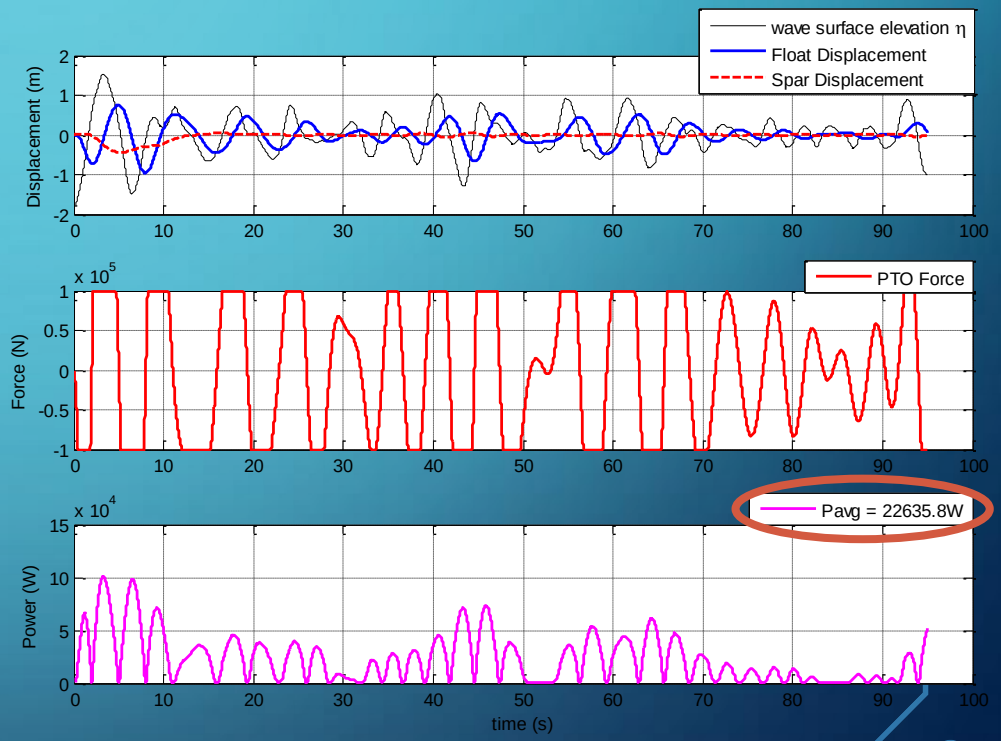

Similar nonlinearities could be added to the relative displacement and mooring.

CONCLUSIONS

- Time domain simulation of generic WEC
- Adaptable to geometry or device type
- Introduction of nonlinearities to model
- Results for any input waveform