Smart Grid Distribution Prediction and Control Using Computational Intelligence

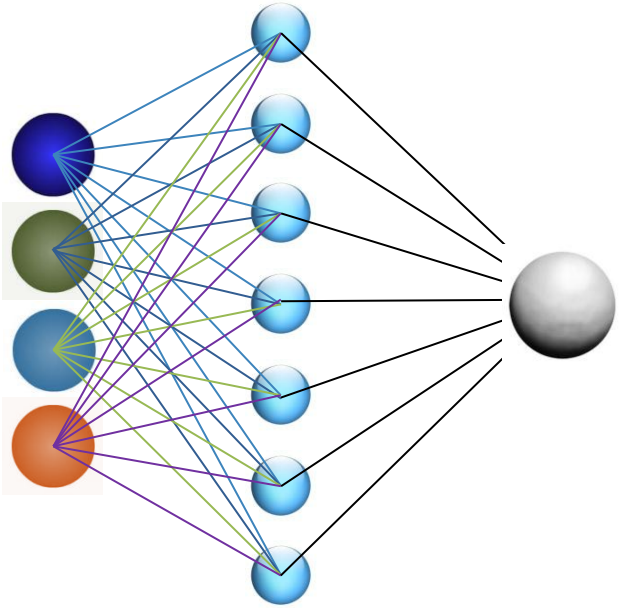

IEEE SusTech 2013

August 1, 2013

Shawn Chandler, PGE Smart Grid Architect
Joshua Hughes, Predictive Learning Utility Systems

Complex Systems

Interconnected parts that as a whole exhibit behavior which is not obvious given the properties and behavior of the individual parts…

- Traffic systems
- Global economy
- Flocks of birds
- Ecosystems
- Social systems
- Internet
- Smart Grid

Source: princeton.edu

Smart Grid is a Complex System

- **Smart Grid resources**:
  - C&R Demand Response
  - Distributed diesel generation
  - Solar array
  - Utility-scale energy storage
  - Customer loads
  - Auto-switching microgrid
- **System dynamics**:
  - Driven by complex interactions and feedback between many components with *complex constraints*
  - Primary feedback is price

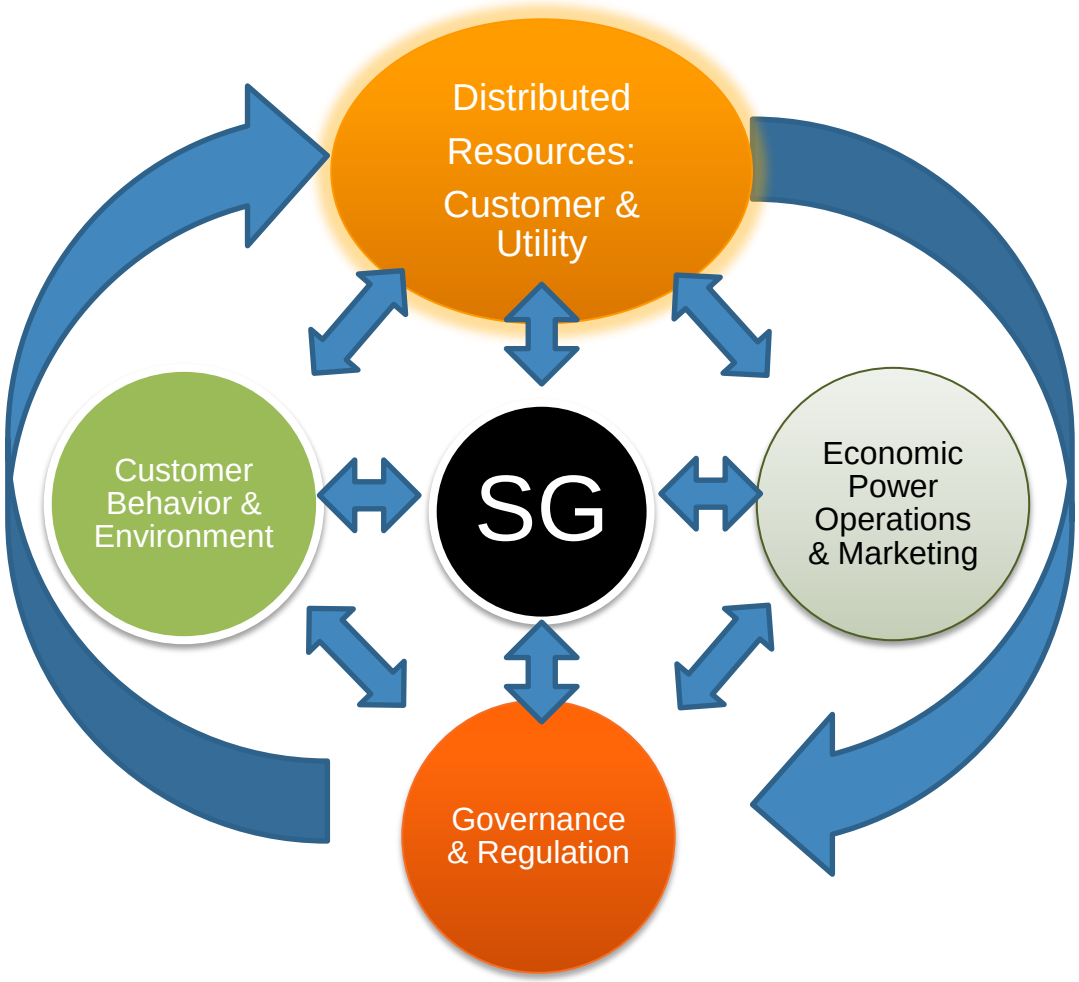

Architecture Challenges

Complexity

- Need for smart grid systems to interact with human behavior, markets, regulation, environment
- Interactions between systems can have unintended effects
- Difficult prediction, optimization

Computability

- Emerging distributed grid resources require integration with each other
- Isolated program decision drivers, programs are not integrated within a comprehensive program, i.e. not "smart"
- Thousands if not *millions of points of control*

Implementation Elements: Distribution Grid Control System

Advanced Metering Infrastructure (AMI)

- 5-15 minute data
- Enables feeder load forecasting
- Behavior verification

Power System Enhancements, Telecommunications, Distributed Control System

- Distributed Generation (≈5 MW)
- Energy Storage (≈5MW)
- Feeder automated switching, PLC data arrays w/MODBUS

Interoperability, Standards

- IEC-61968 & 61970 CIM
- PNWSGD TIS/TFS: regional price signal
- Data integration, SCADA bridge technology

Utility Programs

- Commercial and residential DR
- VER following, shaping (wind, solar)
- Micro-grid and enhanced reliability

OO

- Smart Grid Distribution Prediction and Control Using Computational Intelligence

Goals:

- **Optimize dispatch**
- **Least "cost"**
- **Meet or exceed load**

System Architecture - SoA

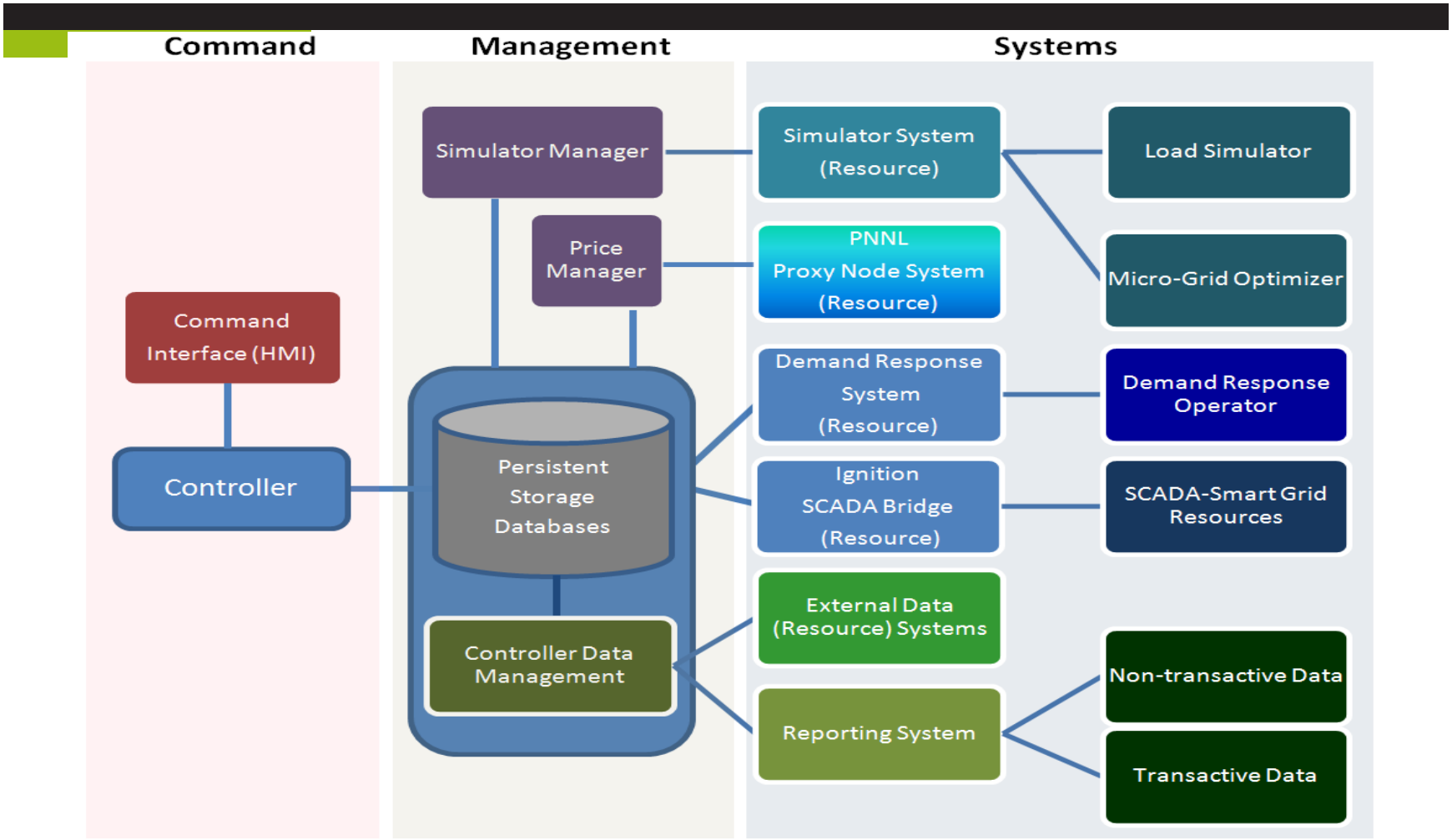

Building the System

- Much time spent analyzing the Hourly Feeder data for the micro-grid
  - Similar analysis for weeks, seasons, years
- Overall trend for peaks during daytime, dominated by industrial and commercial customer loads
- Outlier peaks in the afternoon

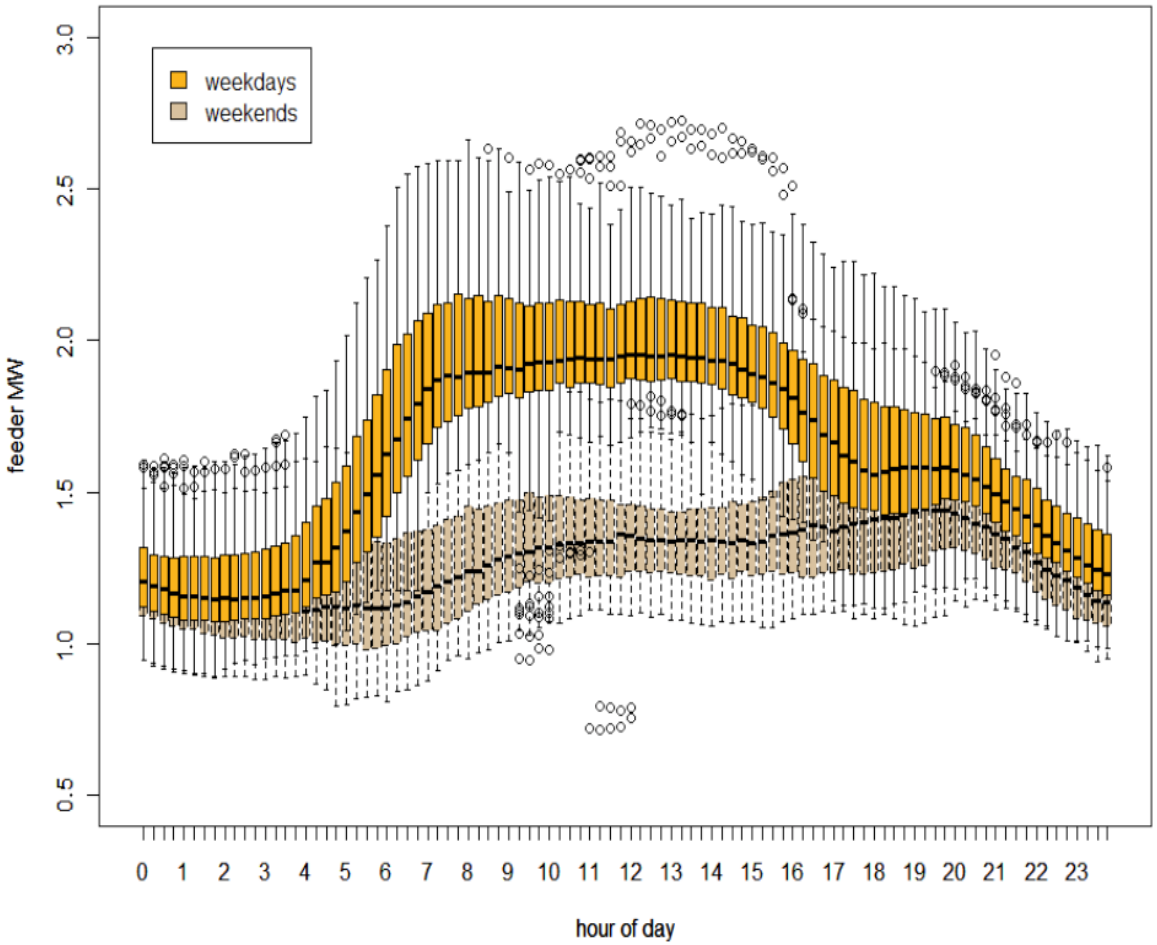

Building the System

- Seasonal trends but with lots of volatility
- Temperature and humidity trends
- Most obvious: temperature is a traditional predictor of demand, but how predictive is it?
- How predictive are other weather variables?

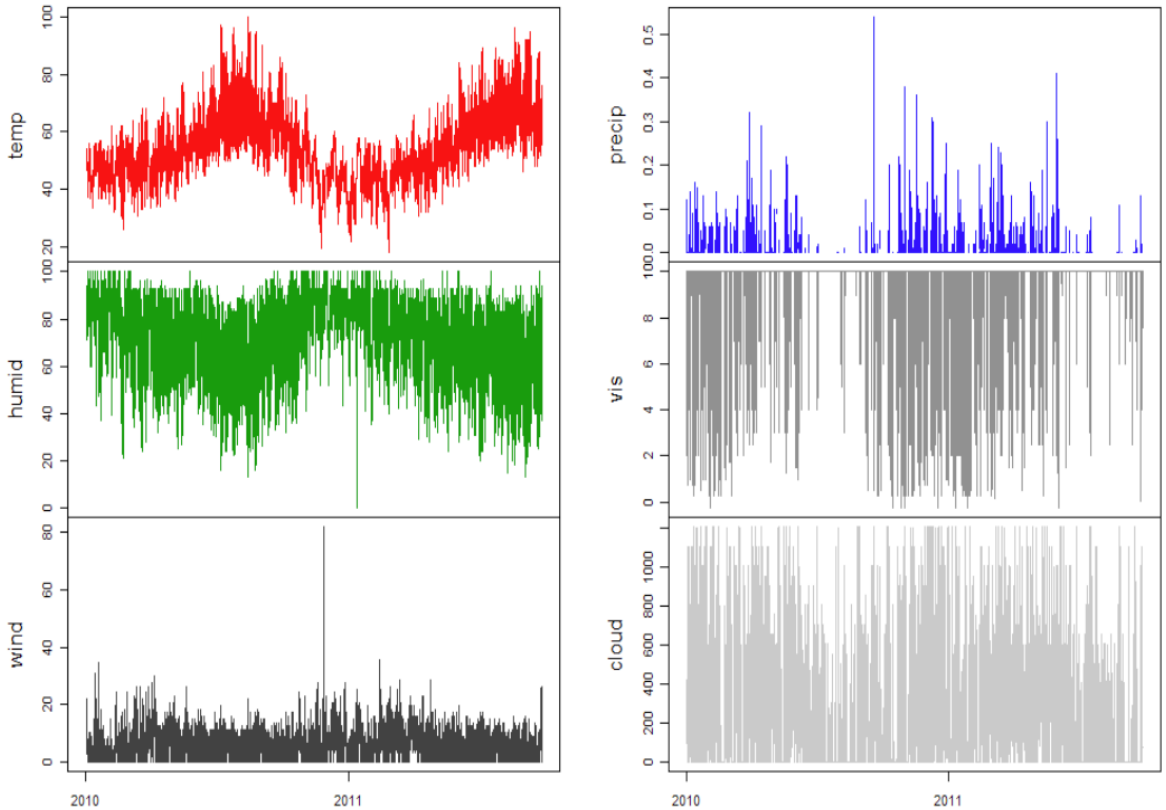

Do relationships exist between sets of variables?

Discrete Multivariate Modeling

- ***Systems approach for identifying the set of all possible relations between the variables***
  - OCCAM (analysis tool, see http://dmm.sysc.pdx.edu/)
    - Heuristic search (through all the possible relations)
    - Useful for prediction
      - Discovering patterns
      - Determines the strength of relations between/among variables
  - Predictive variables are then used to train the neural network for the Load Forecaster

Individual variables in order of predictive power for demand:

- previous demand
- hour of day
- day of week
- temperature now
- temperature forecast
- humidity forecast
- visibility/cloud cover
- precipitation

OCCAM: special thanks to Dr. Martin Zwick, PSU

A Learning System

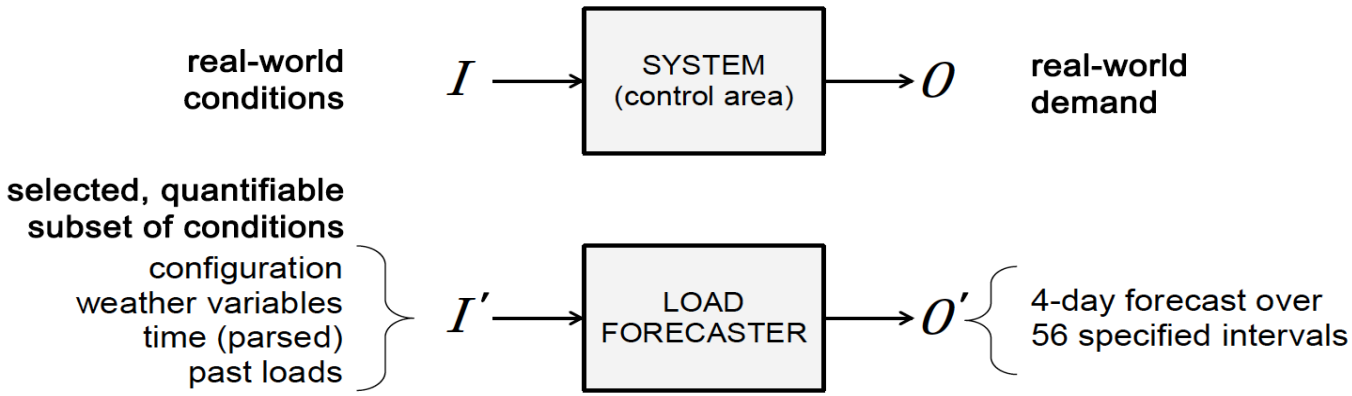

- **The Load Forecaster learns from a *representative* set of real-world data**
  - Train until load forecasts (output *O′*) are within 2-5% of historical demand
  - Accomplished by adjusting the parameters of the model: weights on the connections between its elements/nodes
  - Weights can be adjusted using a variety of algorithms
- **Once in operation, the Load Forecaster may adjust itself using feedback**
  - Based on performance, the difference between *O* and *O′*

System Processing – What Does it Do?

- **Prediction and Smart Grid Asset Dispatch**
  - **Load Forecasting Module** predicts microgrid load over next 72 hours
    - Uses local and regional weather and environment data, historical load, and current microgrid configuration
  - **Dispatch Optimization Module** predicts optimal dispatch, i.e. schedules
    - Uses microgrid conditions, e.g. state information, meter data
    - Resource availability, state information, resource pricing
    - Program and resource constraints, regulatory and operational
    - Regional price
  - Dispatch (on/off) occurs every 5-minutes given an imminent schedule

System Operations – Data Collection

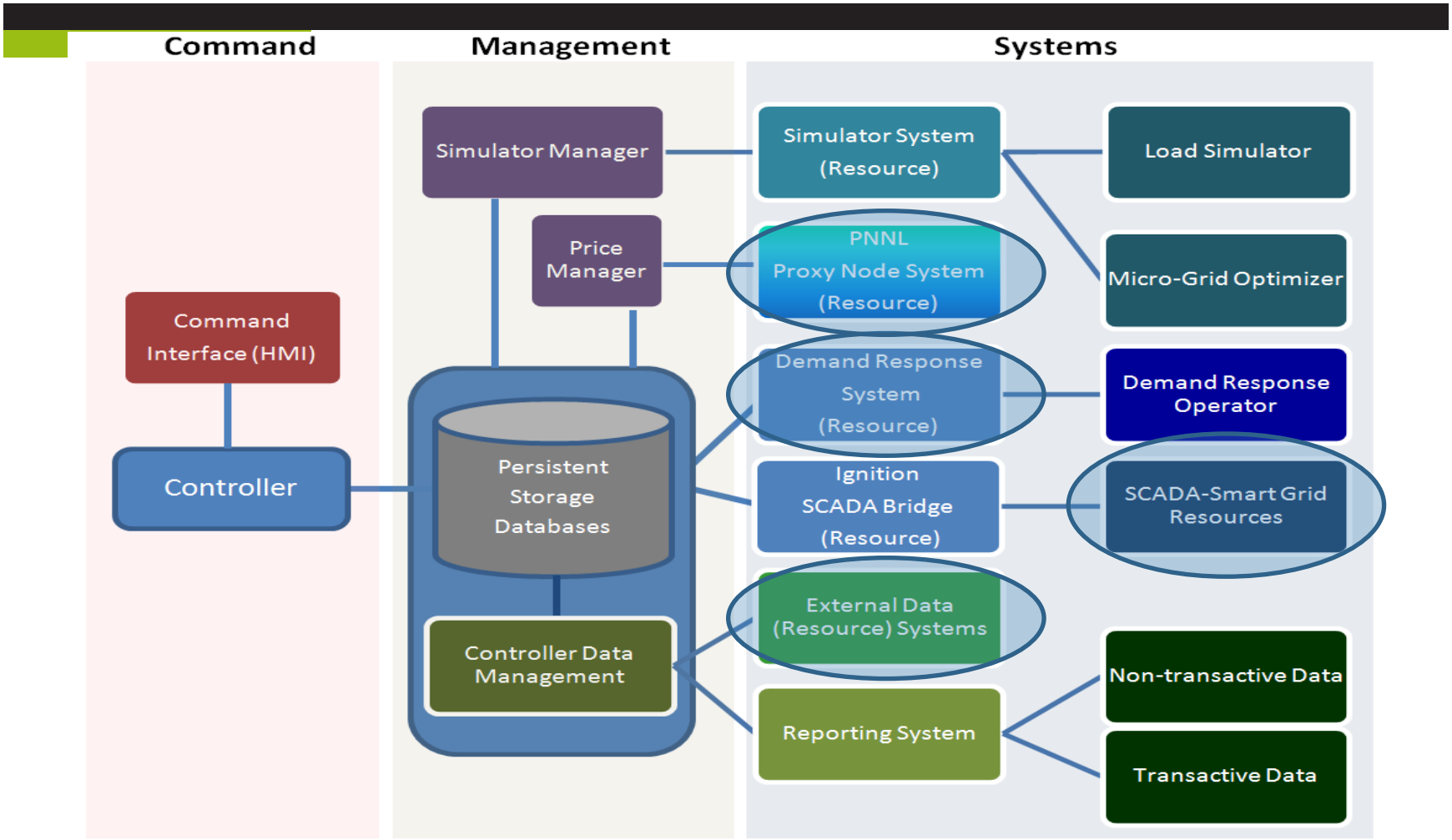

System Input: Price

HE1: 5 minute data

HE2-6: 15 minute data

HE7-24: 1 hour data

HE25-48: 6 hour data

HE48-96: 24 hour data

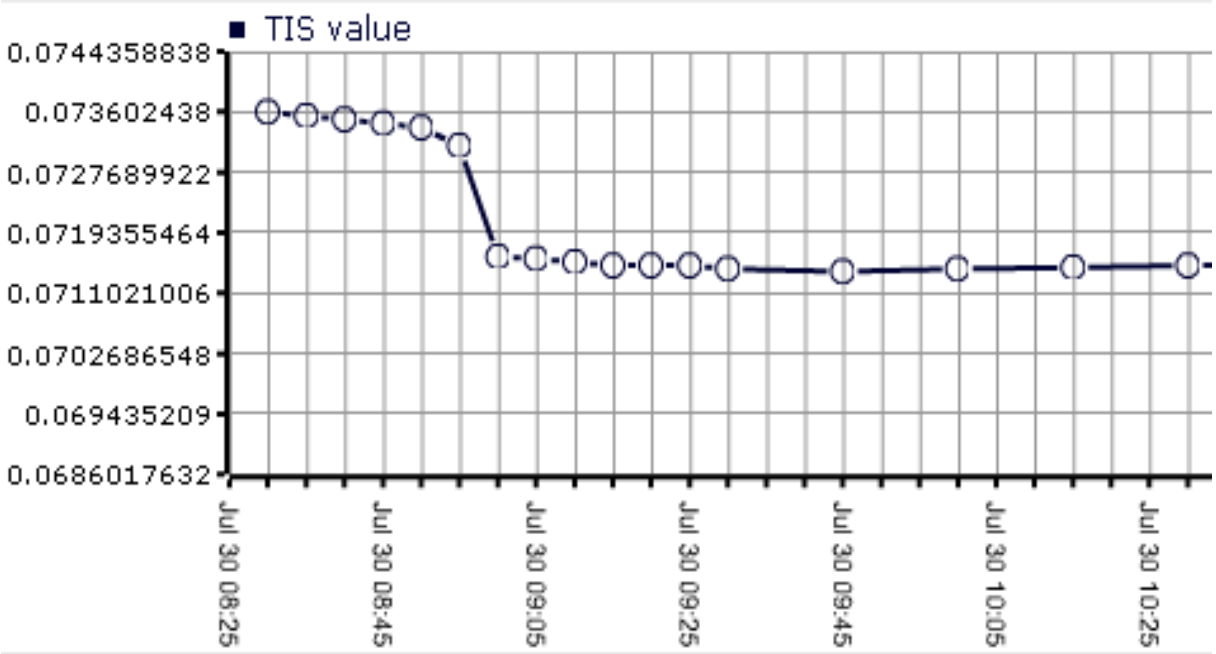

System receives price information:

72 hours into the future, every 5 minutes

System Operations – Simulation & Dispatch

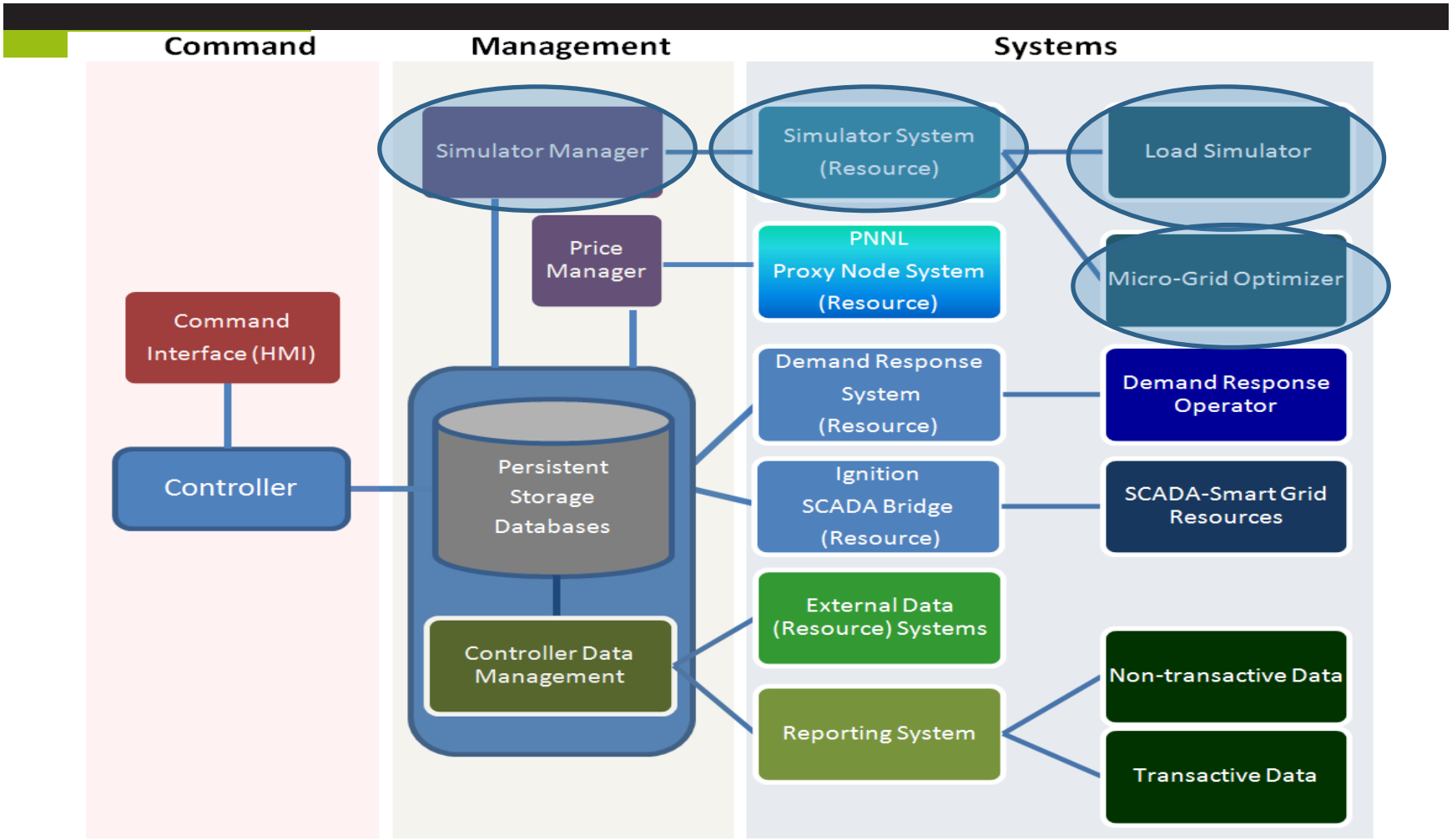

Simulator Manager Detail

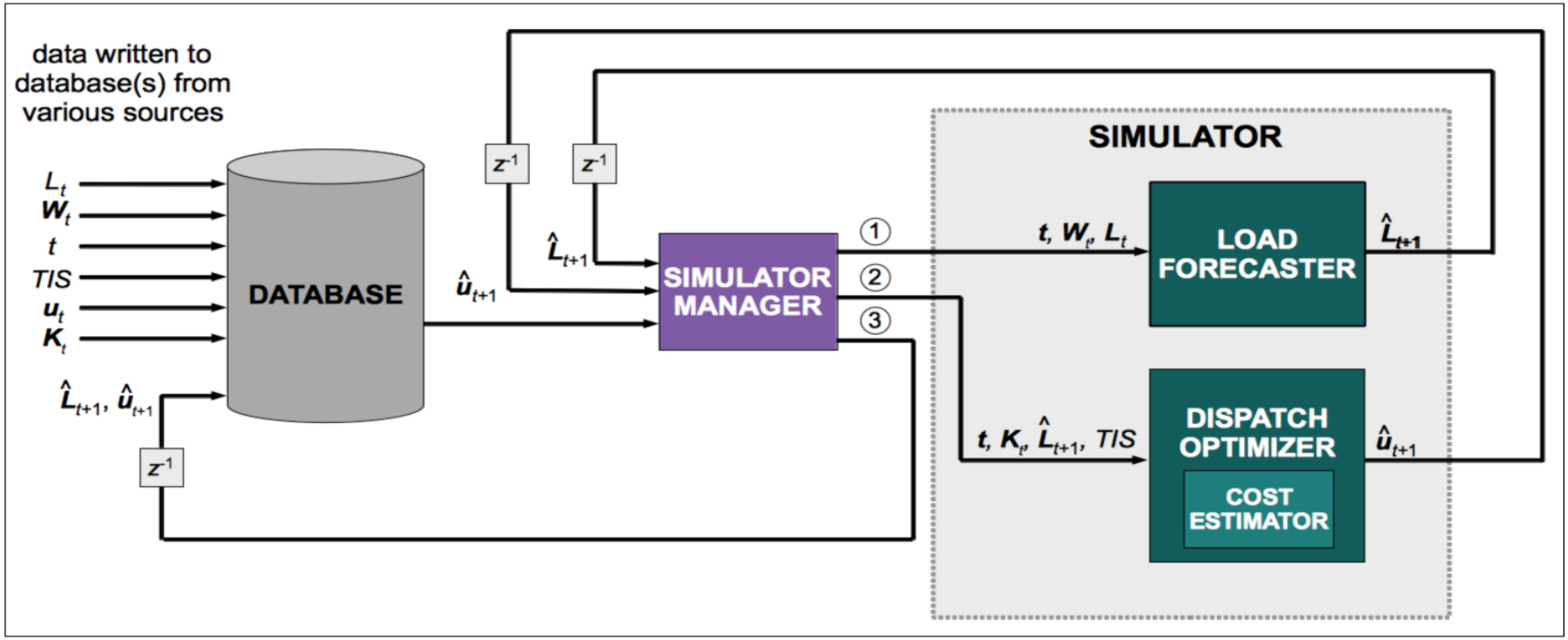

- Initiates a new simulation cycle when a new price signal is received
  - **Inputs** : time (t), weather (W_t), and past loads (L_t), current schedules (u_t) and constraints (K_t)
  - Receives a 3-4 day load forecast, 5 minute period granularity
  - Experimental lower limit to processing time approx. 5 seconds

Load Forecaster Detail

- **Load forecaster *learns* to model a specific microgrid**
  - Multiple contexts
    - Grid configurations (auto-switches)
    - Environmental conditions
- Load forecaster is updated with the latest data available from the controller just before the dispatch decision
- Accuracy 2-5% error within the first 6 hours

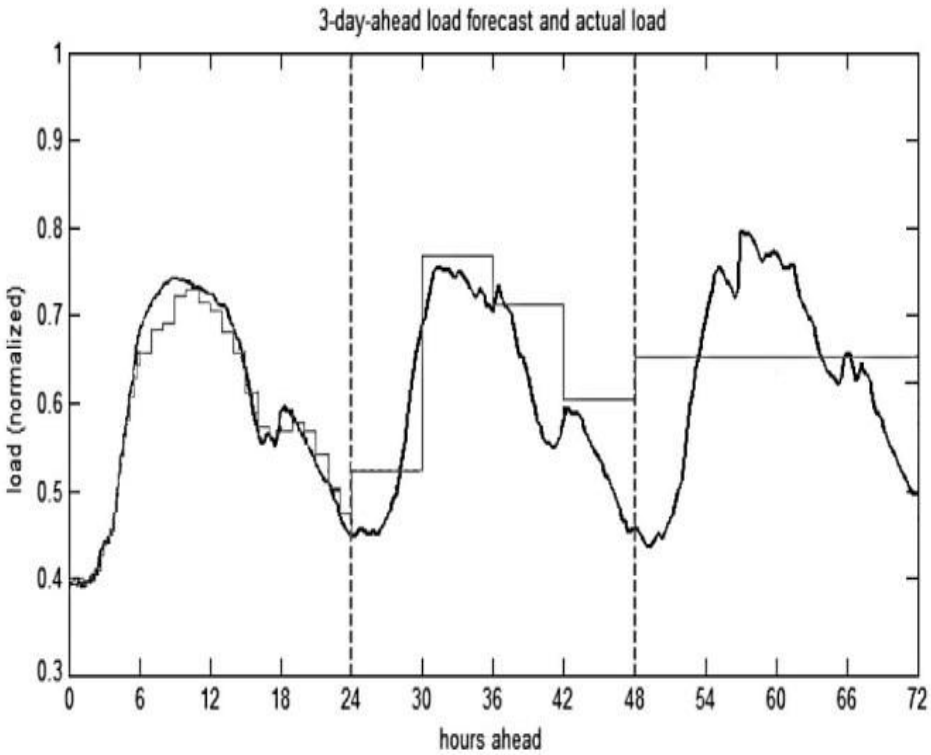

Dispatch Optimization

- Uses 24-hour-ahead load forecast and opportunities based on price signals (i.e., the price to dispatch asset is less than price of energy from the grid)
- Assets must meet every system constraint, taking into account asset state and availability from the SCADA system

- PLC Integration with the system is achieved via a SQL-PLC register bridge, updated “instantly” as the PLC receives information from the field

Dispatch Optimization

- Evaluates available candidate blocks of time to determine the "optimal" schedule for the next 24 hours
- “Optimal” is defined in terms of cost
  - An optimal schedule will minimize the “cost-to-go” for a sequence of dispatch decisions, i.e., a dispatching schedule
  - Cost defined in terms of price of dispatch, usage costs, possible future missed opportunities (due to exhausting uses by dispatching indiscriminately)
  - Key for optimization over the long term is to account for the future costs of sequences of short-term decisions

Dispatch Detail

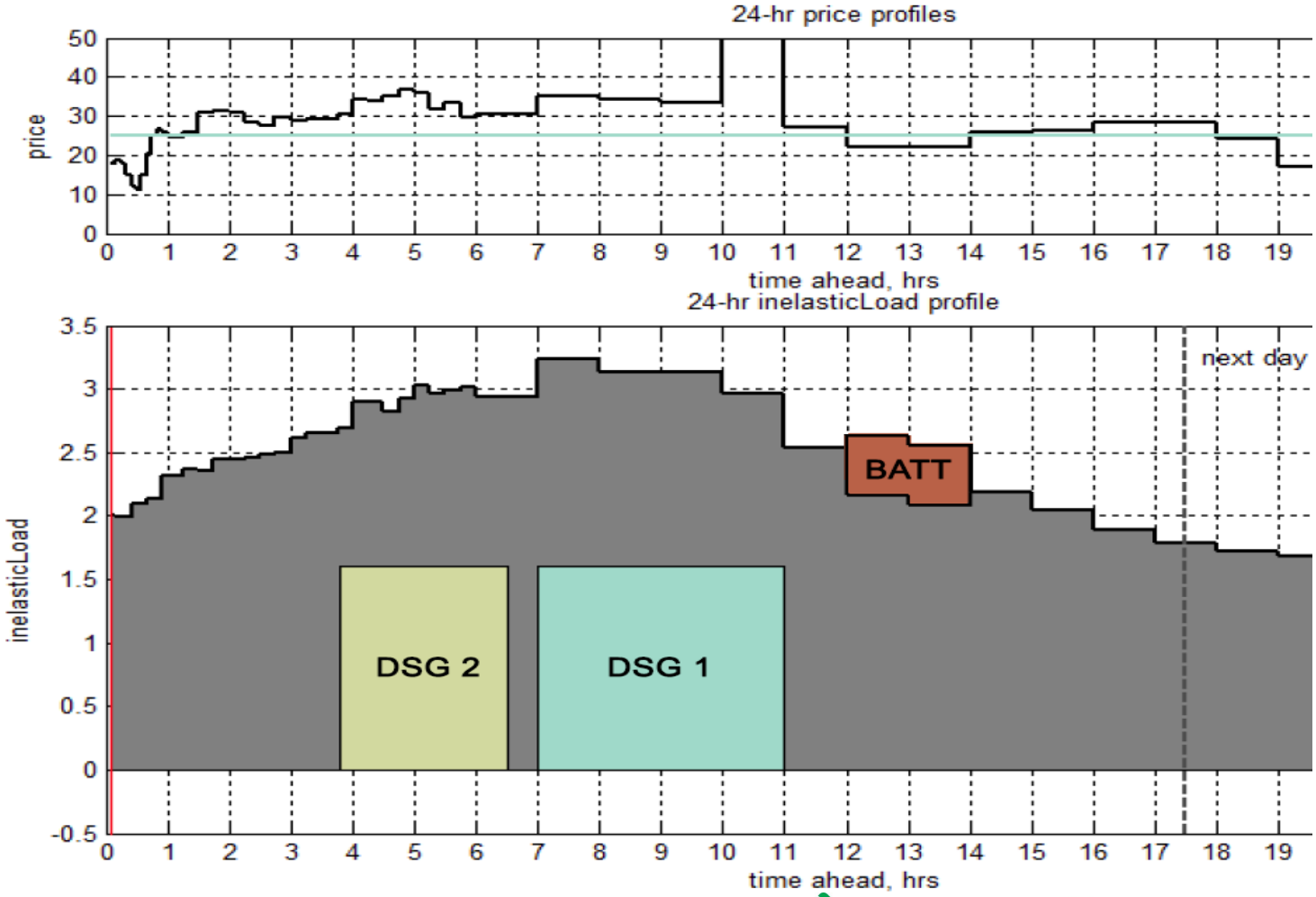

High-Level System Benefits

Economic

- Energy
  - Load shifting
  - Peak shaving
  - Variable Energy Resource following
- Use cases
  - Optimal generation dispatch
  - Avoided Cost from arbitrage
  - Enhanced economic development

Reliability

- Energy
  - Higher power quality
  - Improved load forecasting
- Use cases
  - System reliability
  - Load following
  - Micro-grid balancing

Social

- Energy
  - Enhanced reliability
  - Improved customer choice
  - Improved energy independence
- Use cases
  - Enhanced economic development

Special Thanks

- **US Department of Energy**
  - Funding for the opportunity to complete this research within the Pacific Northwest Smart Grid Demonstration Project

- **Pacific Northwest National Lab**
  - Don Hammerstrom – Principal Investigator
  - Ron Melton – Project Director

Questions?

Shawn Chandler, Smart Grid Architect
Portland General Electric
Shawn.chandler@pgn.com

Joshua Hughes, Chief Systems Engineer
Predictive Learning Utility Systems
Systems Science PhD Program, Portland State University
hughesj@pluspdx.com