Load Modeling Methodologies for Cascading Outage Simulation Considering Power System Stability

Jiajia Song, Eduardo Cotilla-Sanchez, Ted K.A. Brekken

Oregon State University

SusTech 2013

IEEE

Outlines

- Cascading outage
  - Definition, impacts, analysis methods
- Load modeling
  - Importance of load modeling
  - Methodologies for load modeling
- Current work and future objectives
- Summary

Cascading outage

- **Definition**: a sequence of dependent failures of individual components, triggered by initial events, that successively weaken the power system.

Major blackouts

Date	Area	Impacts	Duration
Aug 14, 2003	North America (NE)	61,800 MW, 50M people	2+ days
Sep 28, 2003	Italy	27,000 MW, 57M people	5-12 hrs
Sep 23, 2003	Sweden & Denmark	6,550 MW, 5M people	5 hrs
Nov 4, 2006	Europe	>64,000 MW, 15M households	2 hrs
Nov 10, 2009	Brazil & Paraguay	17,000MW, 80M people	7 hrs
Feb 4, 2011	Brazil	53M people	4 hrs
Sep 8, 2011	US & Mexico (S-W)	4,300MW, 5M people	12 hrs
Jul 30-31, 2012	India	32,000MW, 620M people	2+ days

The highlighted events in the list are caused by cascading outages.

August 14, 2003

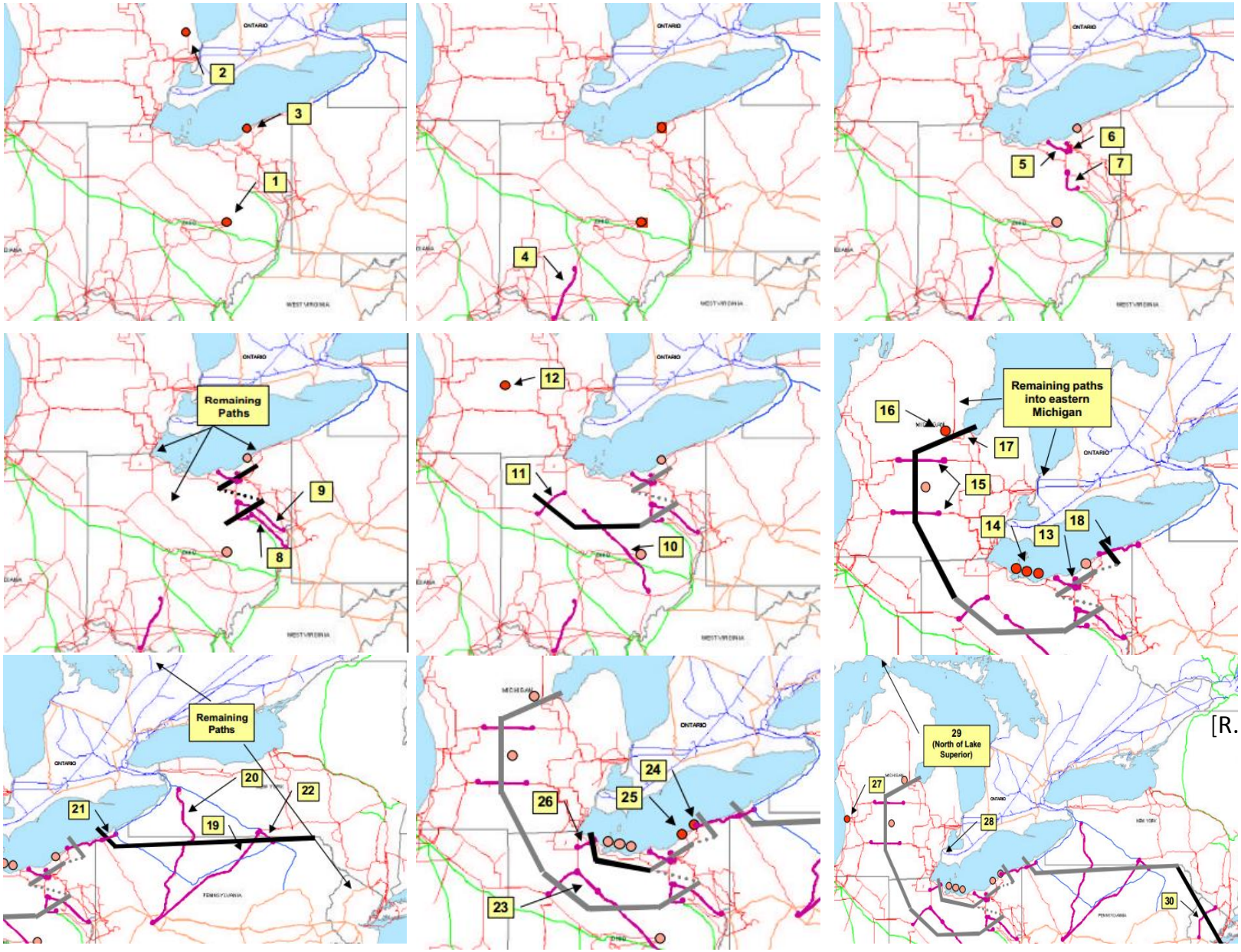

[R. Partner, 2005]

……

August 14, 2003

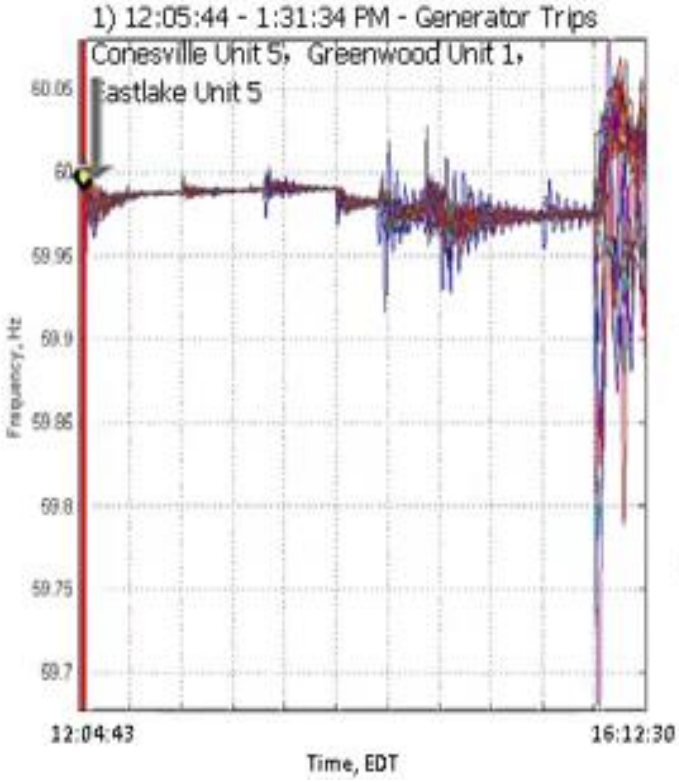

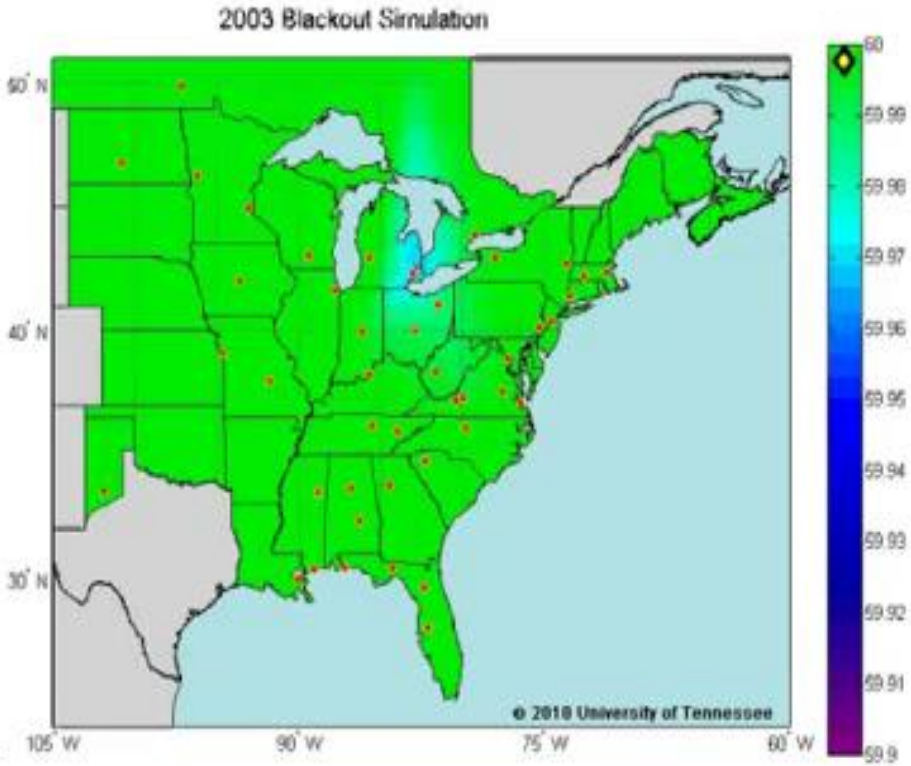

Approaches for cascading outage analysis

- Steady state (or Quasi-steady state) modeling based analysis
  - Regular N-x contingency analysis.
- High level probabilistic models
- Other new methodologies
  - Bifurcation theory based models, Phasor technology, High performance computing, Graphic theory (or topological theory) based models, Data mining and advanced visualization.

➢ Majority of them don't consider this problem from stability perspective, especially from the load complexity point of view, which could be an issue.

Load modeling

- Load: the aggregated power demand at a feeder or substation.
- Immense uncertainty.

- Traditionally, load models includes:
  - Static Load Models
  - Dynamic Load Models

- ZIP static model: $$P_L = P_0\left[p_1\left(\frac{V}{V_0}\right)^2 + p_2\left(\frac{V}{V_0}\right)^1 + p_3\right]$$
- Exponential static model: $$P_L = P_0\left(\frac{V}{V_0}\right)^{K_{pV}}$$
- PSS/E static model:

$$P_L = P_0\left[p_1\left(\frac{V}{V_0}\right)^{n1} + p_2\left(\frac{V}{V_0}\right)^{n2} + p_3\left(\frac{V}{V_0}\right)^{n3}\right]\left(1 + K_{pf}\Delta f\right)$$

- EPRI static model:

$$P_L = P_0\left[p_{a1}\left(\frac{V}{V_0}\right)^{K_{pV1}}\left(1 + K_{pf}\Delta f\right) + (1 - P_{a1})\left(\frac{V}{V_0}\right)^{K_{pV2}}\right]$$

- ZIPE static model:

$$P_L = P_0\left[K_{pz}\left(\frac{V}{V_0}\right)^2 + K_{pi}\left(\frac{V}{V_0}\right)^1 + K_{pc} + K_{p1}\left(\frac{V}{V_0}\right)^{npv1}\left(1 + K_{pf1}\Delta f\right) + K_{p2}\left(\frac{V}{V_0}\right)^{npv2}\left(1 + K_{pf2}\Delta f\right)\right]$$

- Other static model

Dynamic load models

- Physical Dynamic Load Model:
  - 1st or 3rd order induction motor
  - Composite load model

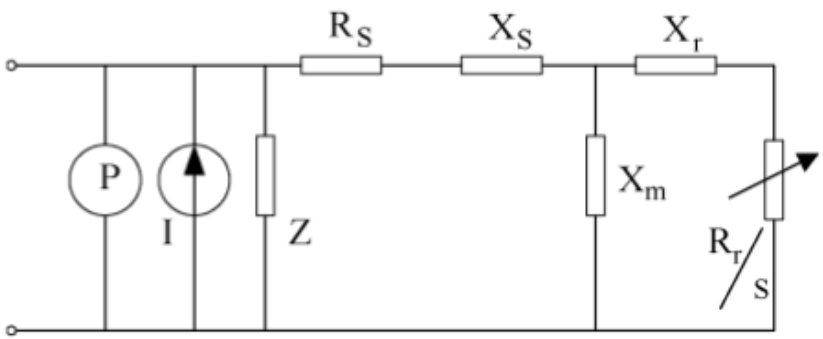

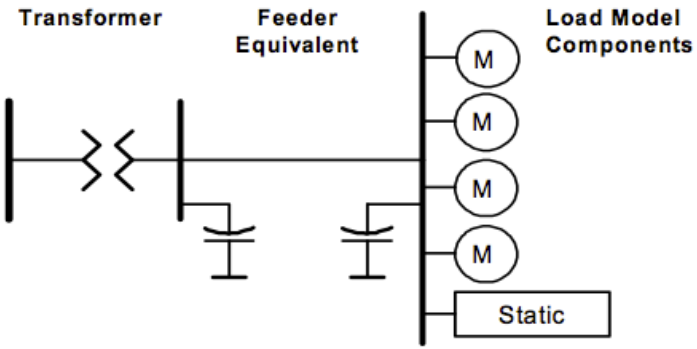

Dynamic load models

- Input-Output Dynamic Model:
  - Neural-Network
  - Differential equation
  - Transfer function

Voltage
Frequency

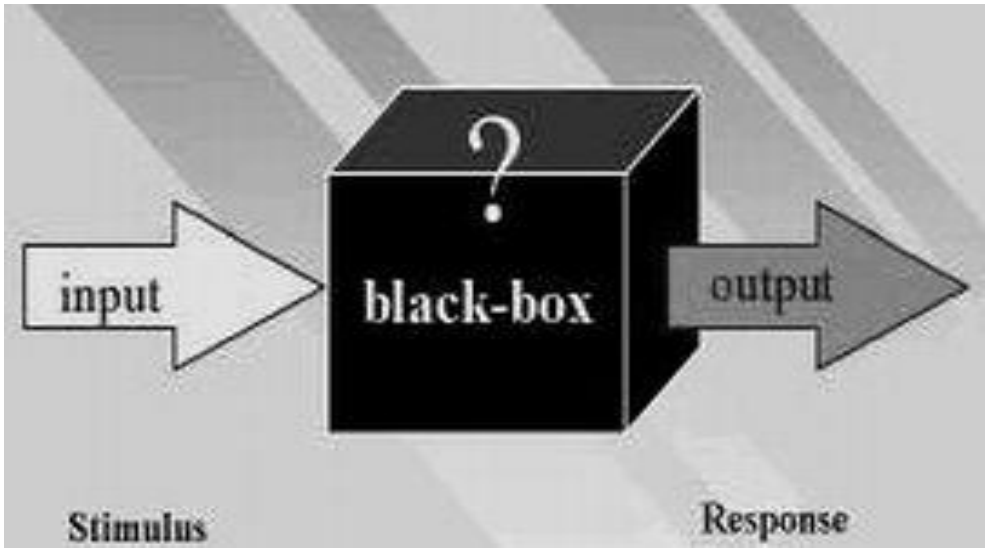

Real
Reactive Power

Dynamic load models

- Other Dynamic Load Models for Specific Applications:
  - For distributed generation (wind, solar)
  - For thermalstatically controlled load
  - For power electronics load

Which is the best candidate for cascading outage analysis?

'Wishlist':

- Simple, but not compromise its ability of representing the dynamics of power system.
- Be easily adapted into existing computer programs.

- A composite load (ZIPE + IM) is selected in our current research.

Table I
SUMMARY OF LOAD MODELING APPROACHES (ADAPTED FROM [29])

APPROACH	STRUCTURE	STRENGTHS	WEAKNESSES
Static Load Models	ZIP, Exponential, ZIPE, ZIPF, or other polynomial models.	Less parameters. Simple. Potential to model large amount of components. Perform well in active power response.	Don't include time sensitive components. Poor accuracy in dynamic response, especially for reactive power.
Dynamic Load Models	Physical dynamic model: induction motor model, composite model (static load + induction motor and/or + synchronous motor)	Clear structure. Strong physical meaning. Better represents dynamic characteristics of various electric end-users than static load. Commonly used.	Large numbers of parameters need to be determined. Simple Aggregation to a composite load may loss some accuracy.
	Input-output dynamic model: Neural Network based method	Ability to learn and adapt. Acceptable performance in normal condition and small range of dynamic response.	Not clear physical meaning. Not all neural network structures apply to dynamic load modeling.
	Input-output dynamic model: differential equation based, transfer function based.	Represent various dynamic loads with the same equation or transfer function.	No clear physical meaning. Poor performance when there is a large portion of induction motors.
	Load modeling for DG–Wind (ZIP + induction motor for $\leq$ 30% penetration; ZIP + asynchronous generator for $\geq$ 30% penetration;)	Clear physical meaning. Acceptable dynamic behavior.	Specific to DFIG wind farm.
	Load modeling for DG-Solar	Perform well dynamically for changes in irradiation and ac grid voltage (for a small aggregation).	More investigations are needed for modeling and validating larger aggregations.
	Load modeling for TCL, and PE.	Clear physical meaning. Acceptable results (for single and small aggregation).	More investigations are needed for modeling and validating larger aggregations.

Current work and future objectives

1. Apply the candidate load model into a benchmarking case for cascading failure study.
   - Currently, a Matlab based dynamic simulator for cascading outage analysis is under development.

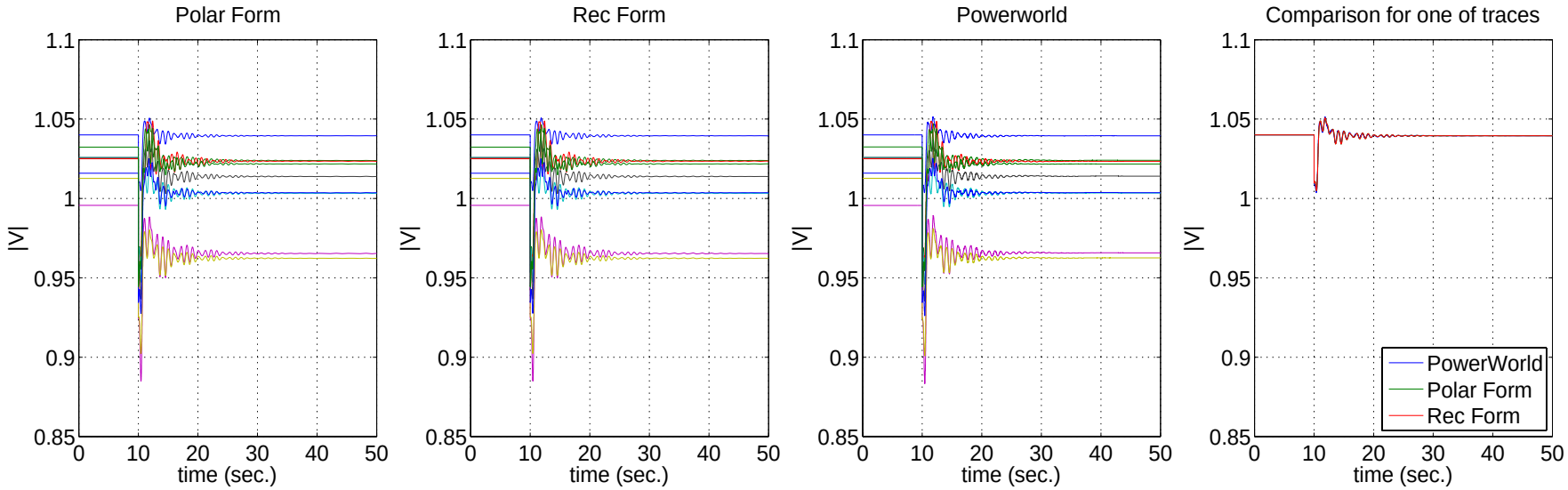

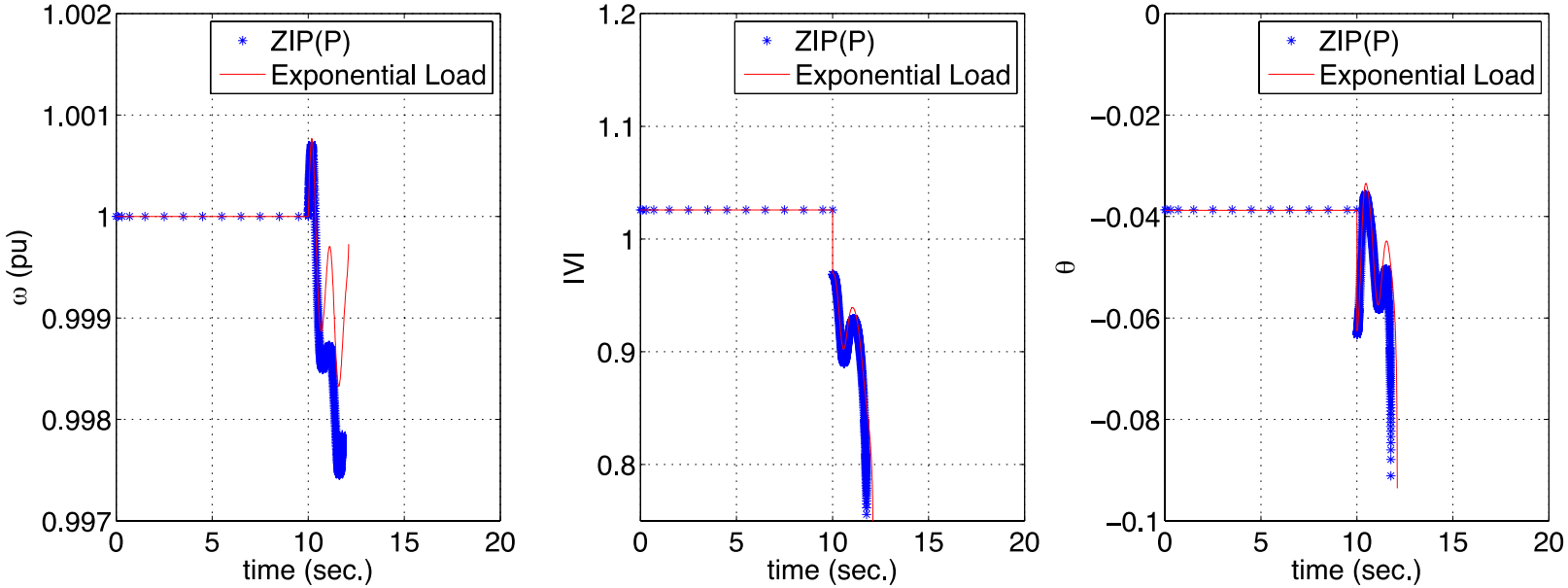

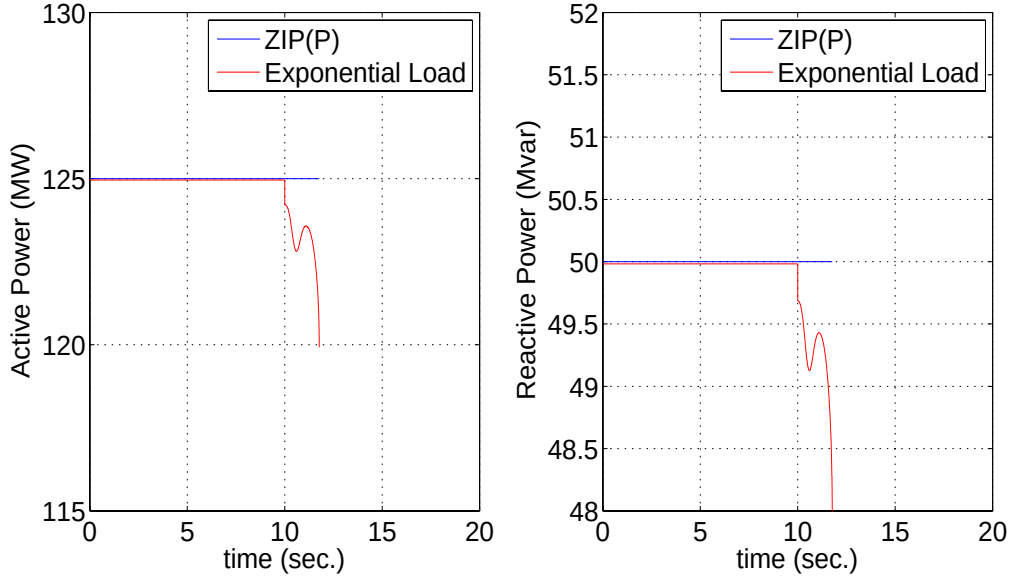

SusTech 2013

IEEE

Current work and future objectives

2. Adapt some algorithms (e.g. random chemistry [Paul. H 2012]) that identifies collections of multiple contingencies that initiates cascading outages.

3. Implement contingency analysis.

Current work and future objectives

4. The power law relationship is a good benchmark to verify our simulation results.

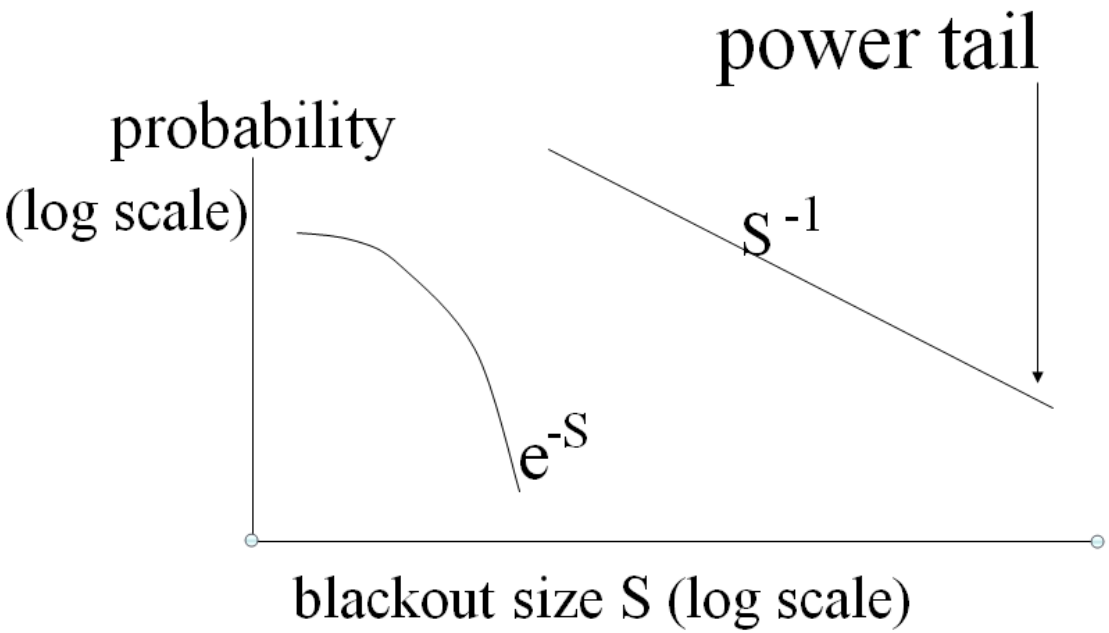

Summary

- Cascading outages mechanisms usually lead to very large blackouts, and they are challenging to understand.
- Inappropriate load model may miss the associated dynamic responses that possibly lead to cascading outages or change their expected sequence.
- A composite load (ZIP + induction motor) could be a good candidate for cascading outage analysis.


Tell me why.
Oh, No!